## Specifications: PRO Collection - Undermount

**Model: NA330R36**

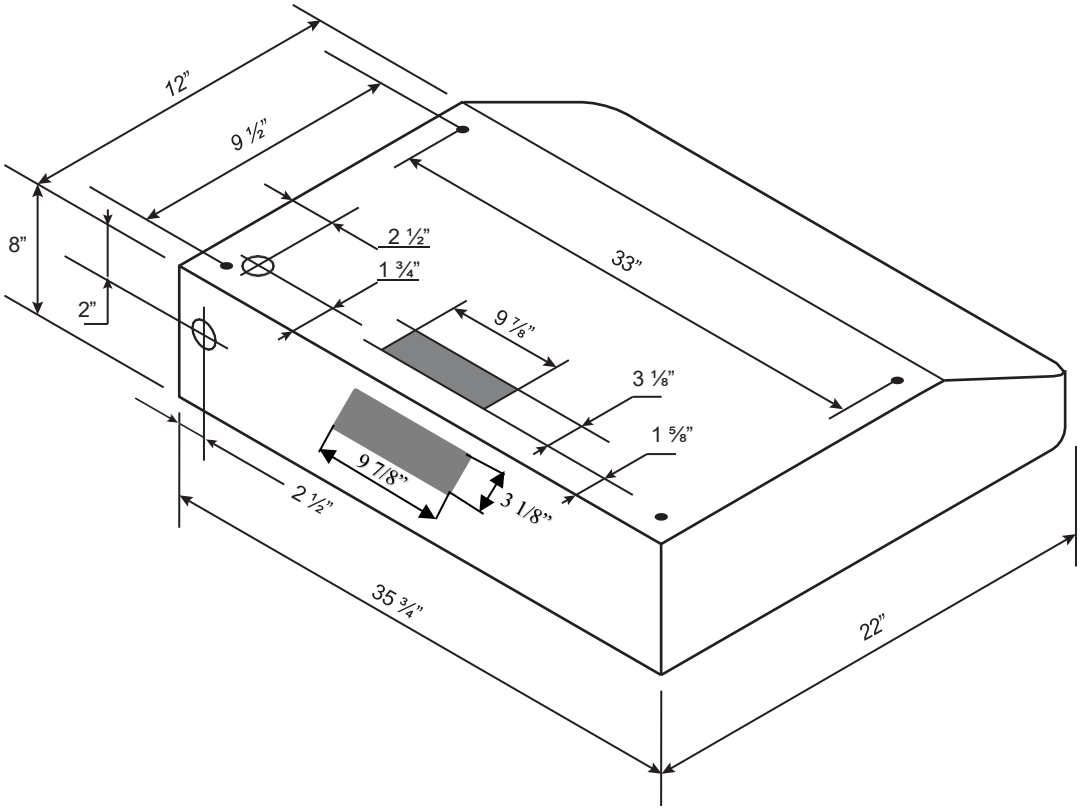


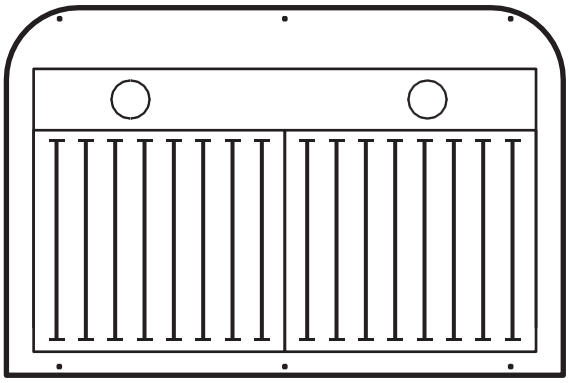

**BOTTOM**

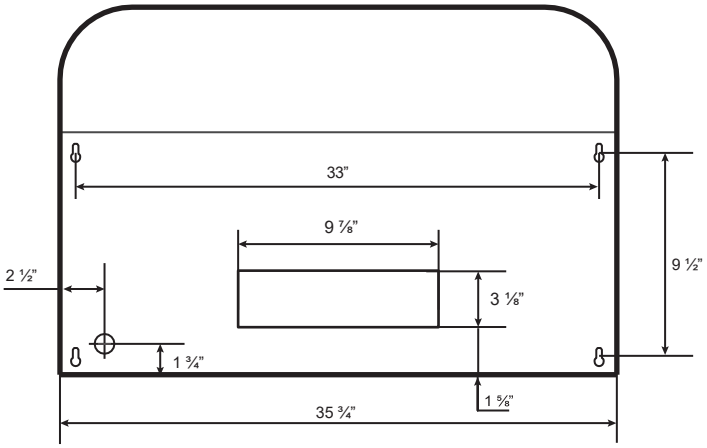


**TOP**

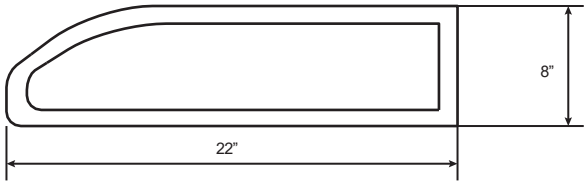


**SIDE**




**FRONT**