Specifications: PRO Collection - Undermount

Model: NA330R30

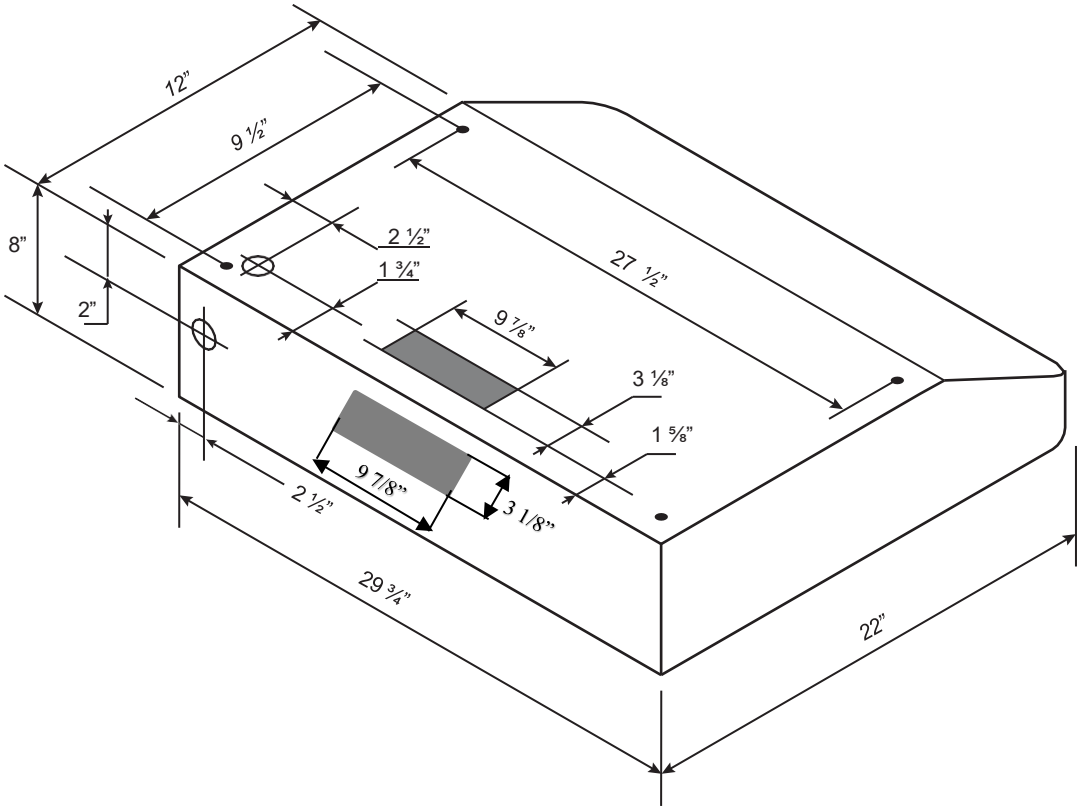

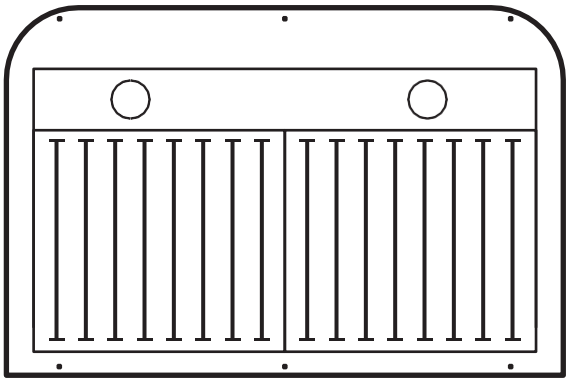

BOTTOM

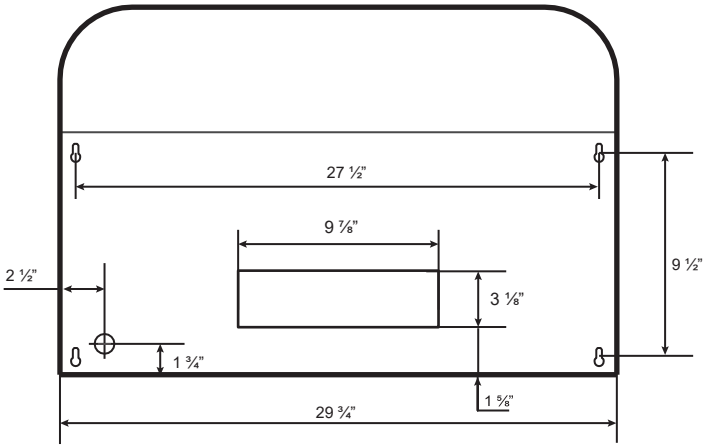

TOP

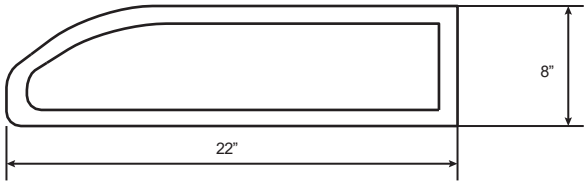

SIDE



FRONT