EU1825D - UNDERMOUNT

Cyclone™
Breathe Better

Undermount

Discover the ease of a sleek, modern-style fan that effortlessly blends into your space without the need for renovation. Featuring a single, centrally positioned fan boasting 210 CFM of power, it combines elegance with functionality. Aluminum mesh filter is simple to remove and replace. It delivers robust performance, making it a perfect fit for any size kitchen.

What's included:

Dual Filter Option:
Ducted OR Recirculating

LED Lights
Installed

MODEL	FINISH	DUCTING	FILTERS	SIZE	CFM
EU1825D24W	White	7" round / 3 1/4" x 10" rectangular	Mesh	24"	210
EU1825D24B	Black	7" round / 3 1/4" x 10" rectangular	Mesh	24"	210
EU1825D24SS	Stainless Steel	7" round / 3 1/4" x 10" rectangular	Mesh	24"	210
EU1825D30W	White	7" round / 3 1/4" x 10" rectangular	Mesh	30"	210
EU1825D30B	Black	7" round / 3 1/4" x 10" rectangular	Mesh	30"	210
EU1825D30SS	Stainless Steel	7" round / 3 1/4" x 10" rectangular	Mesh	30"	210

Cyclone Range Hoods Inc.
1355 Huntingwood Drive, Toronto, ON. M1S 3J1. Canada.
Toll Free: 1-888-293-5662 Tel: (416) 293-0933 Fax: (416) 293-4793 Website: www.CycloneRangeHoods.com

EU1825D - UNDERMOUNT

Cyclone™
Breathe Better

Features

- 2-speed push-button control panel
- 3 ¼” x 10” rectangular damper
- Integrated LED light panel
- Hard-wire connection
- Dual Filter Option: Ducted OR Recirculating
- Charcoal filter and Aluminum mesh filter included
- Convertible - can be used as a recirculating range hood

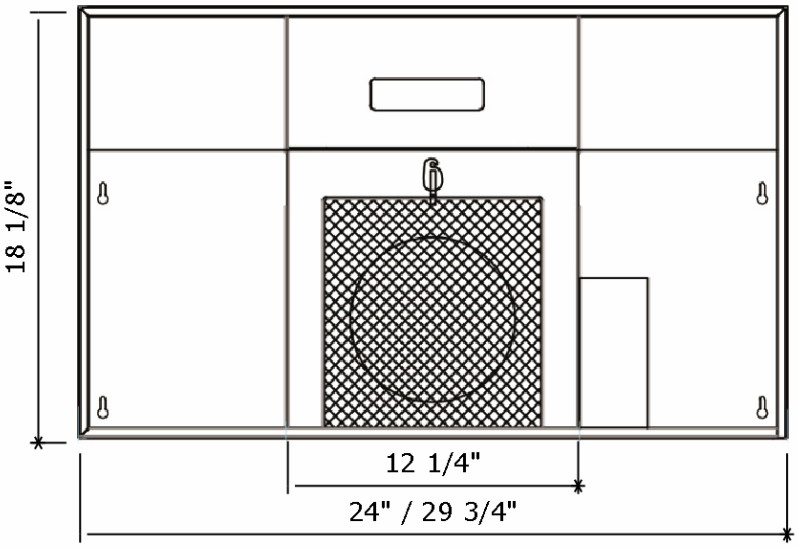

Options

- Width : 24", 30"
- Available finishes : Stainless Steel, White, Black

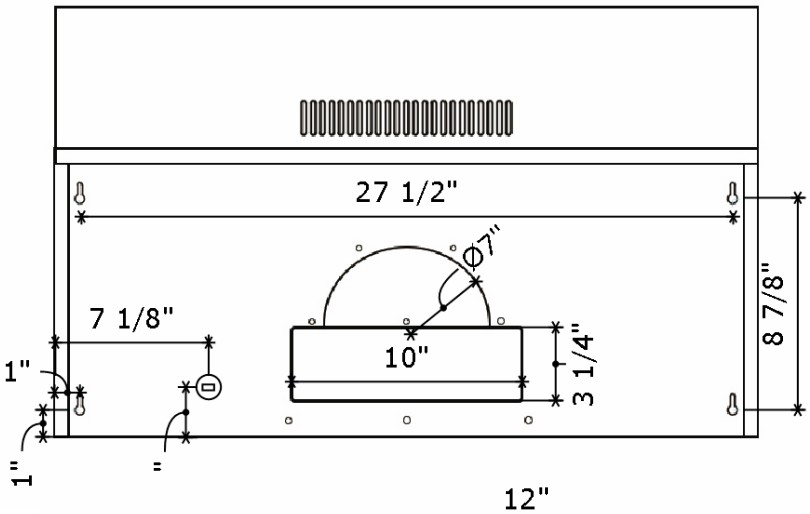

Specifications

- Airflow Volume: 210 CFM
- Electrical Connection: 120 V/60 Hz
- Power Consumption: 240 Watts
- Current: 2.0 Amps
- Fan Speed: Low Speed 1100 RPM
  High Speed 1300 RPM
- Fan Type: Axial Motor
- Knock-out: 3 ¼” x 10” rectangular damper (Top OR Rear)
  7" circular (Top only)
- Noise Level: Min. 4 Sones
  Max. 7 Sones

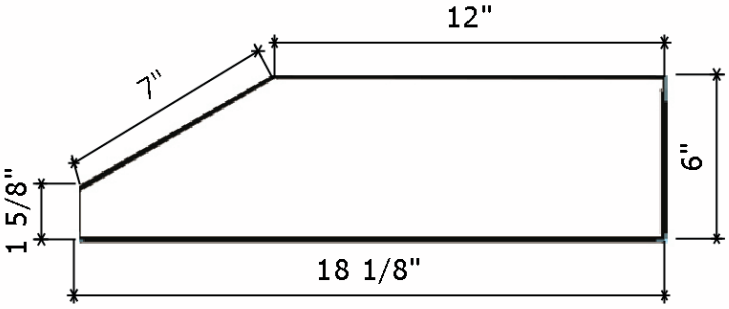

*** 6" duct use does not affect warranty.**