SCB711 | PRO Collection

Cyclone®
Breathe Better

Wall Mount

The SCB711 is a boldly designed, professional-grade range hood. The three-speed push button control panel gives you complete control of the fan while bright LED lights illuminate the cooking area. Fitted with a time-delay OFF feature of up to nine minutes.

Green Features

- 3 Speed Push Button Control Panel
- Dishwasher Safe Baffle Filters
- Grease Tray
- Long-Lasting LED Lights
- Time-Delay OFF Feature
- Grease Cup

Model	Colour	Ducting	Filters	Size	CFM
SCB71130	Stainless Steel	6”	Baffle	30”	650
SCB71136	Stainless Steel	6”	Baffle	36”	650

Cyclone Range Hoods Inc.
1361 Huntingwood Drive, Unit 16. Toronto, ON. M1S 3J1. Canada.
Toll Free: 1-888-293-5662 Tel: (416) 293-0933 Fax: (416) 293-4793 Website: www.CycloneRangeHoods.com

SCB711 | PRO Collection

Cyclone®
Breathe Better

Features

- Wall mount range hood
- 6’’ round duct adapter
- Non-stick aluminum fan blades
- 3 speed push button control
- 2 LED lights (2 x 1.4W, 4000K)
- Quick release dishwasher-safe baffle filters
- Standard chimney fits up to 9 ft. ceiling
- Up to 9 minutes time-delay OFF feature
- Plug-in connection

SCB71130
SCB71136

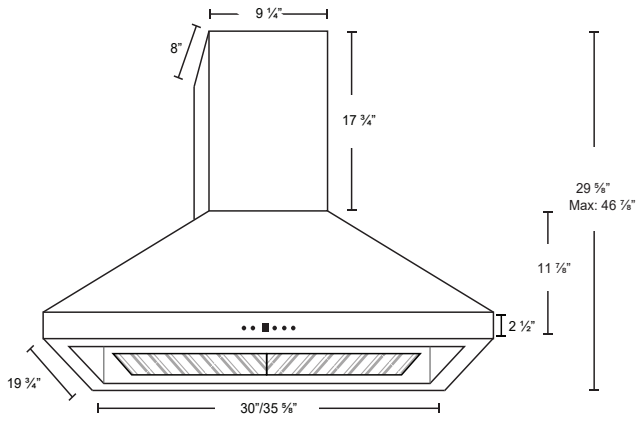

FRONT

SCB71130
SCB71136

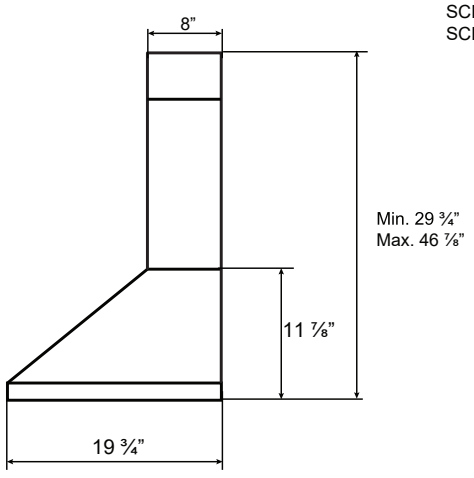

SIDE

Options

- Chimney Flues:
  - A1.CH10 - short (7’-8’ ceilings)
  - A1.CH18 - standard (8’-9’ ceilings)
  - A1.CH30 - extended (9’-11’ ceilings)
- Widths: 30”, 36”

Specifications

- Air Flow Volume: 650 CFM
- Electrical Connection: 120 V/60 Hz
- Power Consumption: 300 Watts
- Current: 2.5 Amps
- Fan Speed: 1599 RPM
- Fan Type: Centrifugal Blower
- Finishes: Stainless Steel
- Ducting: 6’’ Round
- Noise Level: Min. 2 Sones
  Max. 7 Sones

C SA® US