Dimensions: Alito Collection - Island

Model: SI52330 / SI52336

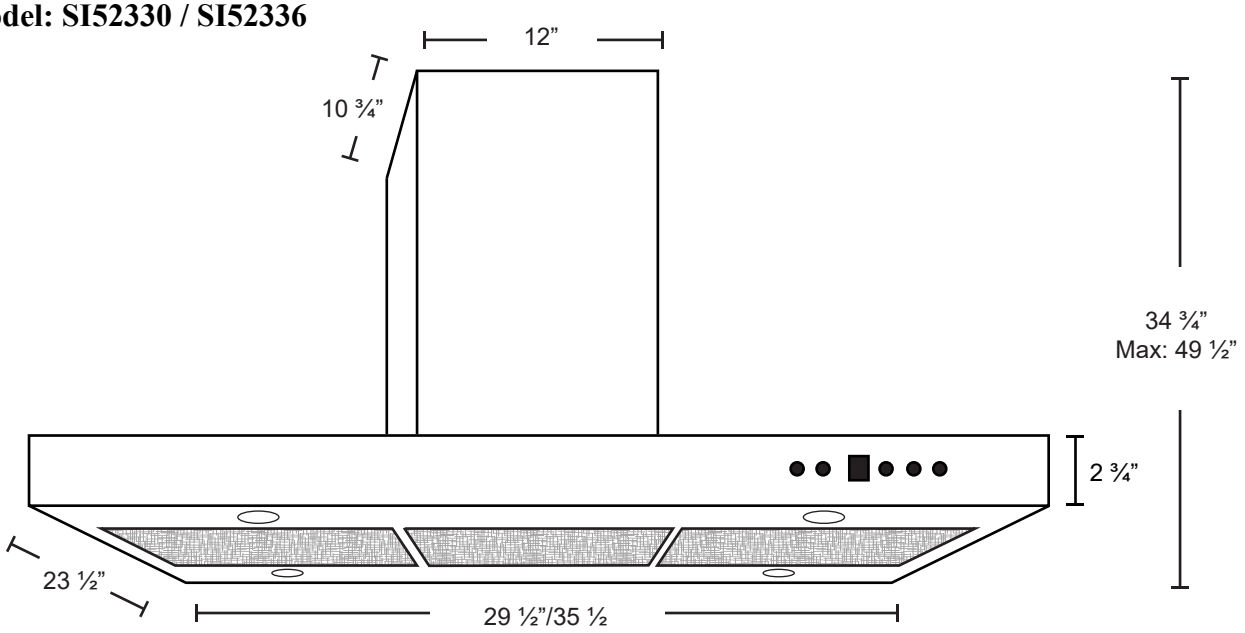

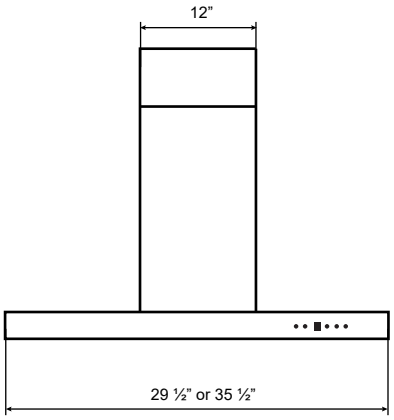

FRONT

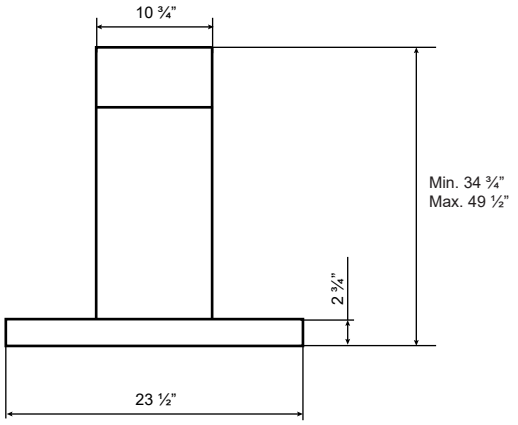

SIDE

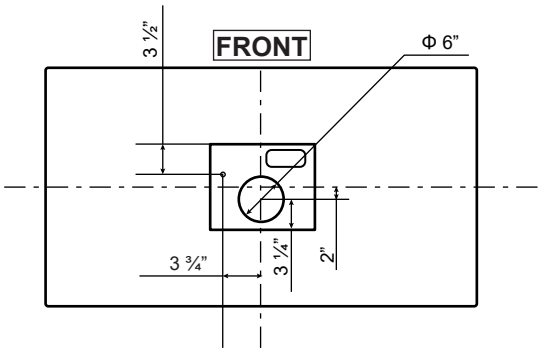

TOP

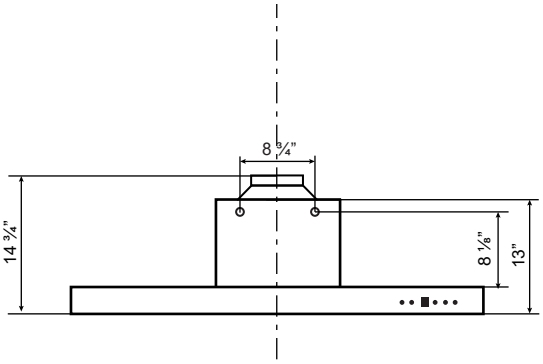

FRONT WITHOUT FLUE